RV030 BLDC Motor | User Manual

Features and gear motor specifications

24V 65W-188W Brushless DC BLDC Motor & Speed Controller Kit with 5:1-80:1 RV030 Worm Gearbox

Features

Brushless DC Motor: Available in 65W, 125W, and 188W power options.

RV030 Worm Gearbox: Available in 10 reduction ratios from 5:1 to 80:1.

Speed Control: Equipped with a panel-type controller with a digital display and speed adjustment knob.

Direction Control: Supports clockwise and counterclockwise rotation, start/stop control, and PLC control.

Speed Adjustment Methods: Supports panel knob, PWM, and pulse frequency control.

Shaft Options: Available with single or double output shafts.

Soft Start and Stop: Supports gradual motor acceleration and deceleration.

Gear Motor Specifications

Motor Type: Brushless DC Motor (BLDC)

Gearbox Model: RV030

Gearbox Type: Worm Gear Reducer

Motor Power: 65W/125W/188W

Gear Ratio: 5:1/10:1/15:1/20:1/25:1/30:1/40:1/50:1/60:1/80:1

Maximum Output Speed: 37.5–600RPM (Depending on Gear Ratio)

Output Torque (65W): 0.9–10N·m

Output Torque (125W): 1.8–14N·m

Output Torque (188W): 2.8–24N·m

Output Shaft Type: Single/Double Output Shaft

Output Shaft Diameter: 14mm

Single Output Shaft Length: 102mm

Double Output Shaft Length: 128mm

Keyway Width: 5mm

Shaft End Thread: M6×16

Gearbox Mounting Holes: 4×M5

RV030 BLDC Motor | User Manual

Speed controller specifications and package contents

Speed Controller Specifications

Mounting Type: Panel Type

Power Supply Options: DC24V/Single-Phase AC220V

Motor Speed Range: 150–3000RPM

Operating Temperature: -10°C to +45°C

Speed Adjustment: Panel Knob/PWM/Pulse Frequency

Signal Output: Speed/Alarm

Rotation Direction: CW/CCW

Controller Dimensions: 97.3×53.5×90mm

Package Contents

Brushless RV030 Gear Motor: 1pc

Speed Controller: 1pc

Single or Double Output Shaft: 1pc

Shaft Mounting Accessories: 1set

Contact Us
E-mail:support@oyostepper.com
Telephone Number: +86-023-68438829
Official Site:https://www.oyostepper.com

57mm BLDC Motor (Square)

Dimensional Drawing

Unit: mm

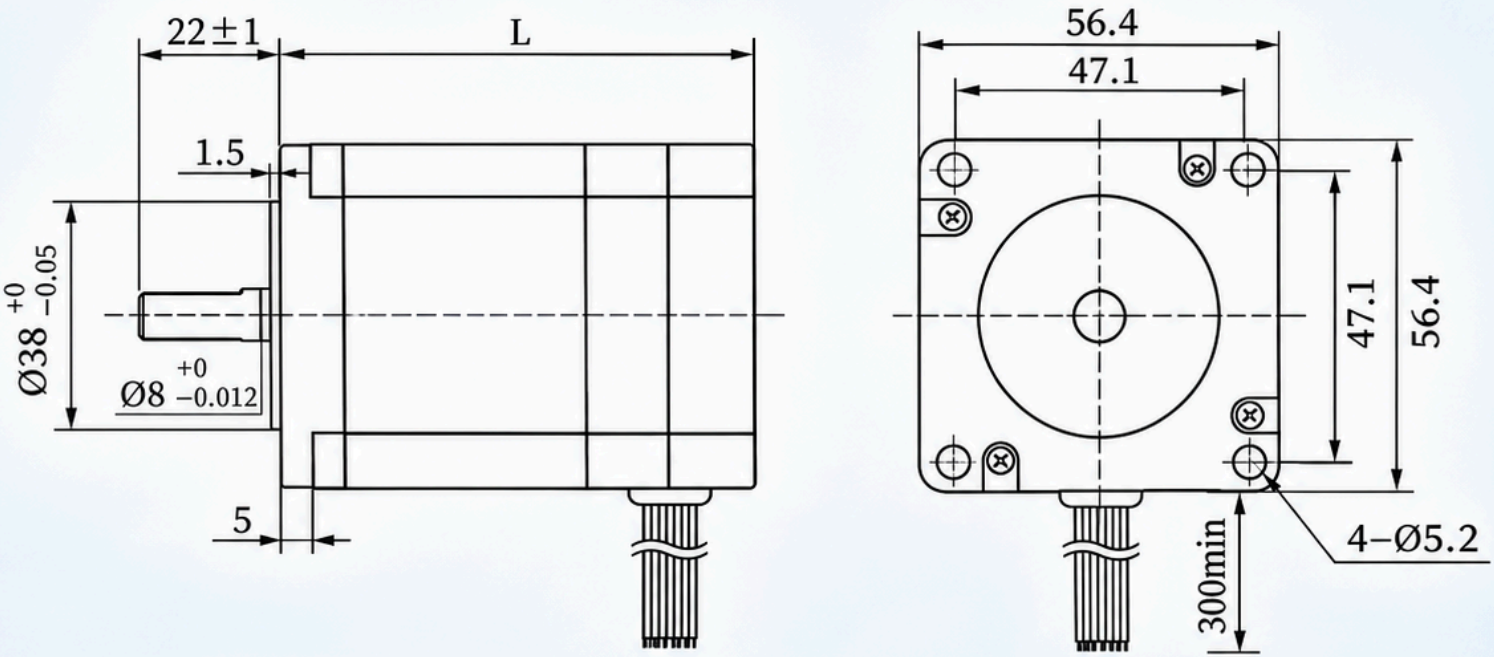

Specification Parameters

Model	Output Power (W)	Motor Voltage (VDC)	Rated Speed (RPM)	Rated Torque (Nm)	Motor Length (mm)	N.W. (kg)
57BLF−0730NBB	65	24	3000	0.22	62	0.65
57BLF−1230NBB	125	24	3000	0.4	80	0.93
57BLF−1830NBB	188	24	3000	0.6	101	1.28
57BLF−1230HBB	125	220	3000	0.32	80	0.93
57BLF−1830HBB	188	220	3000	0.64	101	1.28

BLDC RV030 GEARED MOTOR (65W–188W)

Dimension Drawing (Unit: mm)

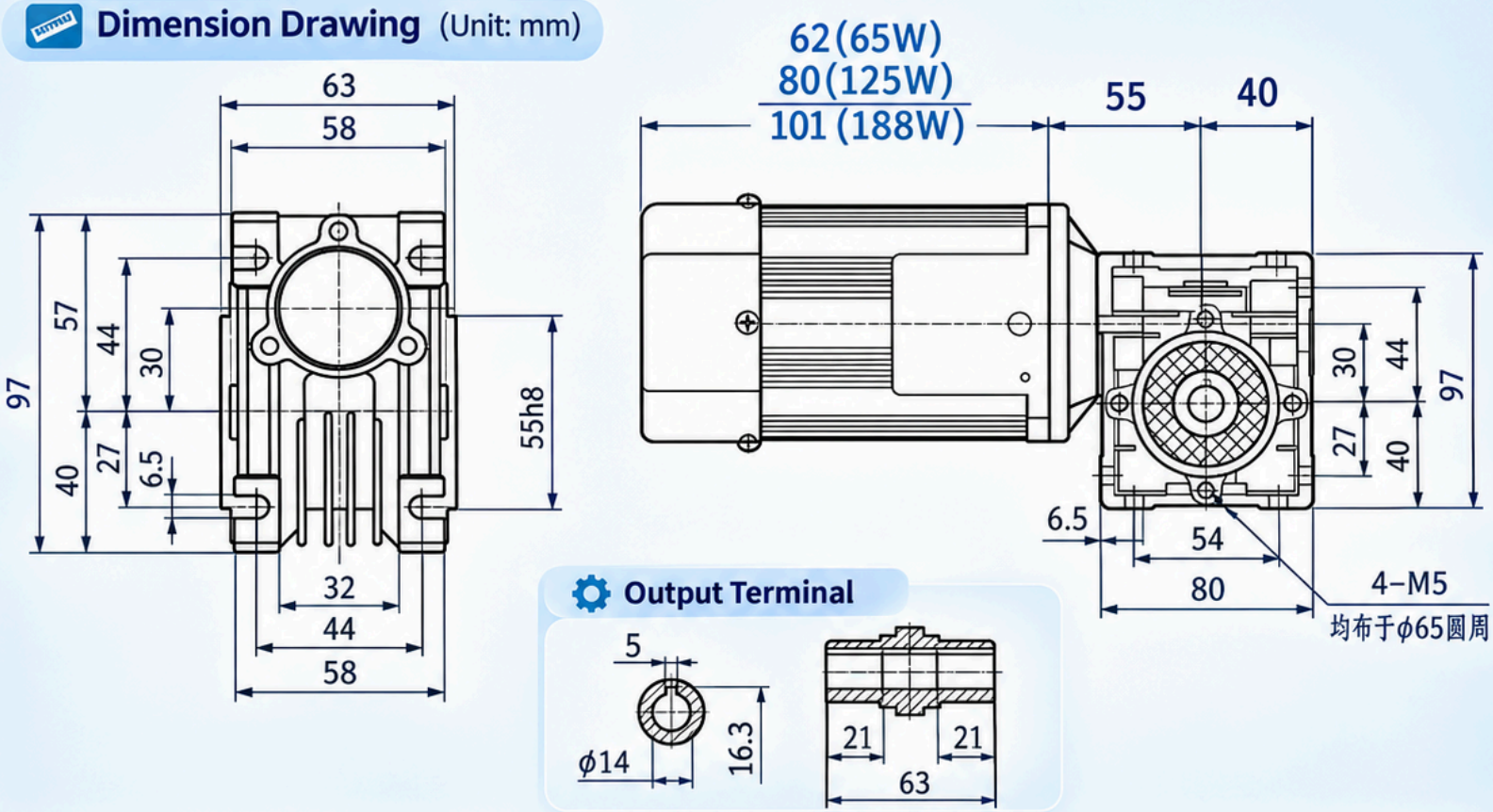

Output Terminal

RV030 reducers with a speed ratio of 30:1 or higher have **Self-Locking Function**

Gear Ratio & Performance Parameters

Gear Ratio		1:5	1:10	1:15	1:20	1:25	1:30	1:40	1:50	1:60	1:80
Max Speed RPM		600	300	200	150	120	100	75	60	50	37.5
Output Torque (N·m)	65W	0.90	1.80	2.60	3.50	4.40	5.00	6.00	7.00	8.00	10.00
	125W	1.80	3.50	5.00	6.00	7.00	8.00	10.00	11.00	13.00	14.00
	188W	2.80	5.00	7.10	9.00	10.00	12.00	14.00	17.00	19.00	24.00

PANEL TYPE BLDC SPEED CONTROLLER

- With displayer
- Knob speed control, simple operation
- Speed could be adjust by PLC directly
- Reliable performance, easy wiring
- Higher torque at low speed, long life



Parameter List

Mounting Type	Panel type
Power Supply	DC24V / Single Phase 220V
Speed Range	150 ~ 3000 RPM
Operating Environment	-10°C ~ +45°C
Signal Output	Speed / Alarm
Speed Adjust Methods	Panel knob / PWM / Pulse frequency

Dimensions (Unit: mm)

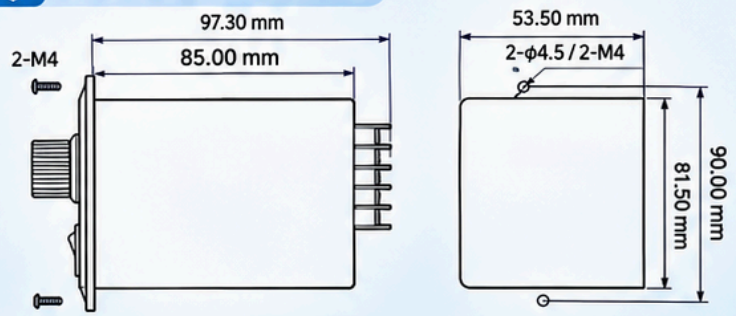

Direction Change

- For an external switch start-stop/reversing situation, see Figure 3.
- When it is necessary to switch the direction through the PLC, just connect CW, CCW, COM directly to the output terminal of the PLC, and the motor can be started/stopped and the running direction can be switched without external relays. Refer to Figure 3.

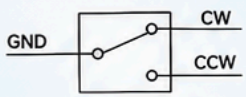

Ship type switch ON-ON

Figure 1

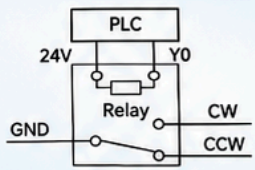

Figure 2

Start and Stop

- Use panel switch.
- Disconnect CW/CCW with GND (A switch CD1 250V6A is recommended)---Figure 3.
- PLC/upper computer could control the motor start/stop, CW, CCW, GND could be connected with PLC by relays.---Figure 4.

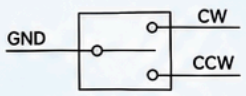

Shop type switch ON-OFF-ON

Figure 3

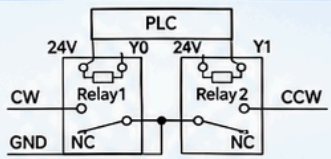

Figure 4

Speed Mode

- Use the panel knob to adjust the speed (default), if you need other speed adjustment methods, please contact sales for setting.
- PWM duty cycle: The speed regulation can be controlled by outputting PWM signals through PLC and other upper computers (NPN sink type) ---Figure 1.
- Pulse frequency: the speed regulation (1HZ=1RPM) can be controlled by outputting a frequency signal from a PLC (NPN drain type)---Figure 1.
- Fixed speed mode.(need to contact sales to set).

Output Signal

- Alarm output (default output mode): When the controller doesn't work, and the alarm code would be displayed on the displayer. When the OUT output port is set as alarm output, OUT and COM will be connected at this time, OUT port is low level---Figure 2.
- Speed output: When the motor is running, it will synchronize the current motor speed and output the corresponding frequency 1RPM=1HZ (please contact sales for setting)---Figure 2.

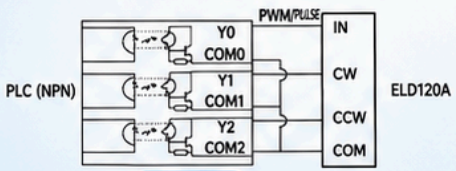

Figure 1

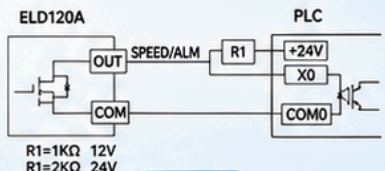

Figure 2

65W Kit

- 1 × Brushless RV030 Gear Motor
- 1 × Controller
- 1 × Dual Output Shaft

Specifications

Gear Ratio		1:5	1:10	1:15	1:20	1:25	1:30	1:40	1:50	1:60	1:80
Max Speed (RPM)		600	300	200	150	120	100	75	60	50	37.5
Output Torque (N·m)	65W	0.90	1.80	2.60	3.50	4.40	5.00	6.00	7.00	8.00	10.00
	125W	1.80	3.50	5.00	6.00	7.00	8.00	10.00	11.00	13.00	14.00
	188W	2.80	5.00	7.10	9.00	10.00	12.00	14.00	17.00	19.00	24.00

Kit Overview



Kit Contents



Brushless RV030 Gear Motor × 1



Controller × 1



Dual Output Shaft × 1

65W Kit

- 1 × Brushless RV030 Gear Motor
- 1 × Controller
- 1 × Single Output Shaft

Specifications

Gear Ratio		1:5	1:10	1:15	1:20	1:25	1:30	1:40	1:50	1:60	1:80
Max Speed (RPM)		600	300	200	150	120	100	75	60	50	37.5
Output Torque (N·m)	65W	0.90	1.80	2.60	3.50	4.40	5.00	6.00	7.00	8.00	10.00
	125W	1.80	3.50	5.00	6.00	7.00	8.00	10.00	11.00	13.00	14.00
	188W	2.80	5.00	7.10	9.00	10.00	12.00	14.00	17.00	19.00	24.00

Kit Contents







Brushless RV030 Gear Motor × 1



Controller × 1



Single Output Shaft × 1

125W Kit

- 1 × Brushless RV030 Gear Motor
- 1 × Controller
- 1 × Dual Output Shaft

Specifications

Gear Ratio		1:5	1:10	1:15	1:20	1:25	1:30	1:40	1:50	1:60	1:80
Max Speed (RPM)		600	300	200	150	120	100	75	60	50	37.5
Output Torque (N·m)	65W	0.90	1.80	2.60	3.50	4.40	5.00	6.00	7.00	8.00	10.00
	125W	1.80	3.50	5.00	6.00	7.00	8.00	10.00	11.00	13.00	14.00
	188W	2.80	5.00	7.10	9.00	10.00	12.00	14.00	17.00	19.00	24.00

Kit Overview





Kit Contents



Brushless RV030 Gear Motor × 1



Controller × 1



Dual Output Shaft × 1

125W Kit

- 1 × Brushless RV030 Gear Motor
- 1 × Controller
- 1 × Single Output Shaft

Specifications

Gear Ratio		1:5	1:10	1:15	1:20	1:25	1:30	1:40	1:50	1:60	1:80
Max Speed (RPM)		600	300	200	150	120	100	75	60	50	37.5
Output Torque (N·m)	65W	0.90	1.80	2.60	3.50	4.40	5.00	6.00	7.00	8.00	10.00
	125W	1.80	3.50	5.00	6.00	7.00	8.00	10.00	11.00	13.00	14.00
	188W	2.80	5.00	7.10	9.00	10.00	12.00	14.00	17.00	19.00	24.00

Kit Overview





Kit Contents



Brushless RV030 Gear Motor × 1



Controller × 1



Single Output Shaft × 1

188W Kit

- 1 × Brushless RV030 Gear Motor
- 1 × Controller
- 1 × Dual Output Shaft

Specifications

Gear Ratio		1:5	1:10	1:15	1:20	1:25	1:30	1:40	1:50	1:60	1:80
Max Speed (RPM)		600	300	200	150	120	100	75	60	50	37.5
Output Torque (N · m)	65W	0.90	1.80	2.60	3.50	4.40	5.00	6.00	7.00	8.00	10.00
	125W	1.80	3.50	5.00	6.00	7.00	8.00	10.00	11.00	13.00	14.00
	188W	2.80	5.00	7.10	9.00	10.00	12.00	14.00	17.00	19.00	24.00

Kit Overview



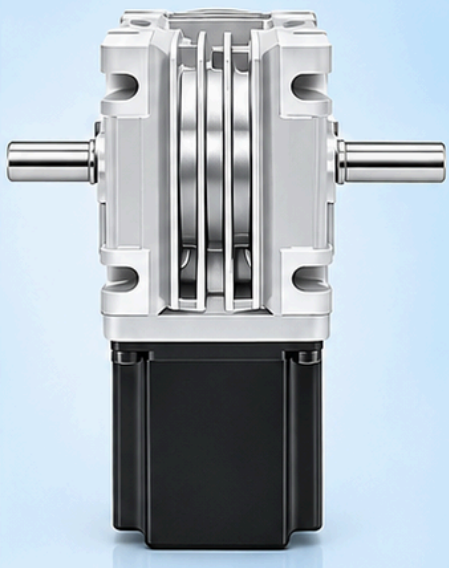

Kit Contents



Brushless RV030 Gear Motor × 1



Controller × 1



Dual Output Shaft × 1

188W Kit

- 1 × Brushless RV030 Gear Motor
- 1 × Controller
- 1 × Single Output Shaft

Specifications

Gear Ratio		1:5	1:10	1:15	1:20	1:25	1:30	1:40	1:50	1:60	1:80
Max Speed (RPM)		600	300	200	150	120	100	75	60	50	37.5
Output Torque (N·m)	65W	0.90	1.80	2.60	3.50	4.40	5.00	6.00	7.00	8.00	10.00
	125W	1.80	3.50	5.00	6.00	7.00	8.00	10.00	11.00	13.00	14.00
	188W	2.80	5.00	7.10	9.00	10.00	12.00	14.00	17.00	19.00	24.00

Kit Overview





Kit Contents



Brushless RV030 Gear Motor × 1



Controller × 1



Single Output Shaft × 1